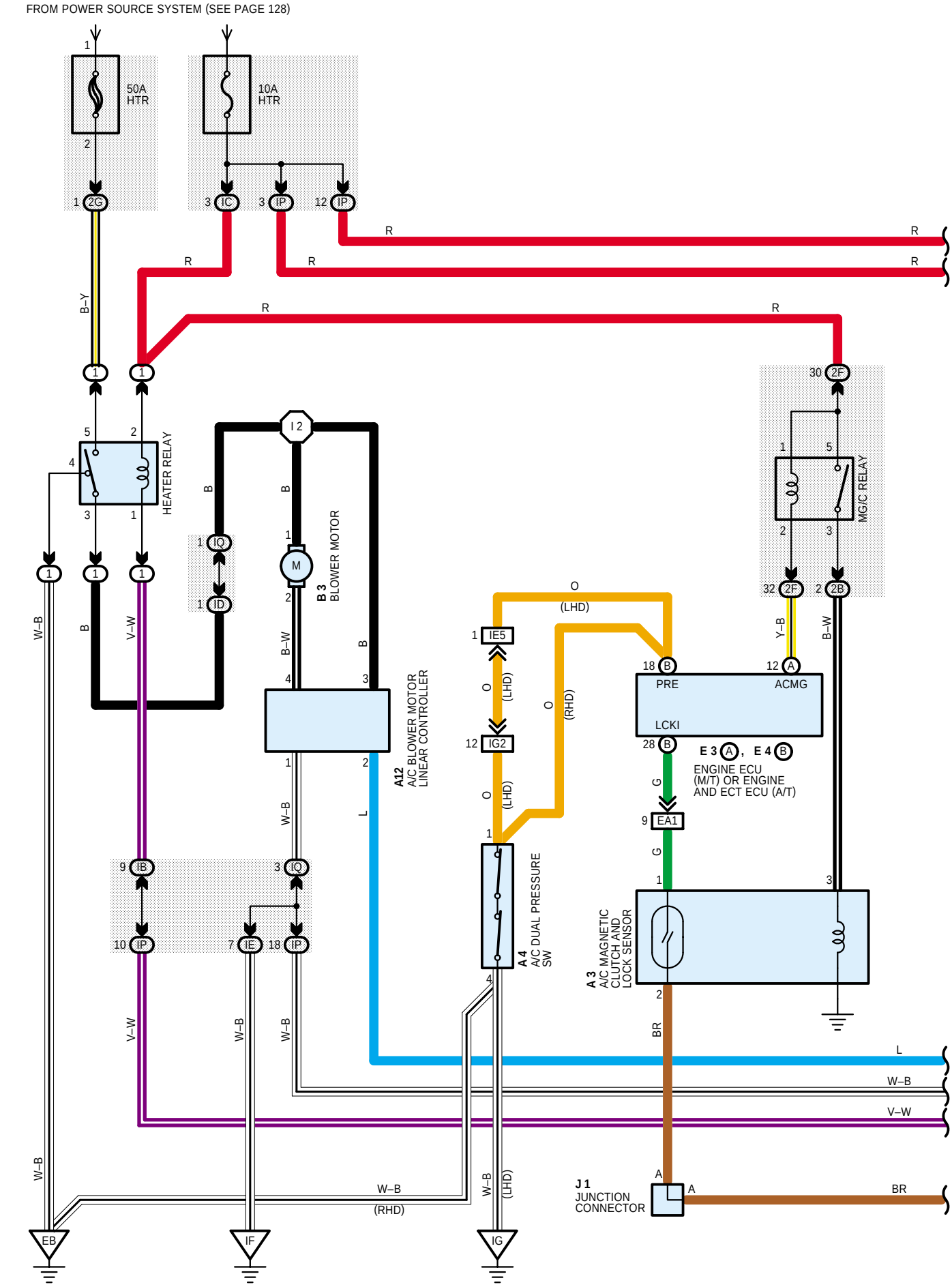
FROM POWER SOURCE SYSTEM (SEE PAGE 128)
50A HTR
10A HTR
HEATER RELAY
MG/C RELAY
B 3 BLOWER MOTOR
A12 A/C BLOWER MOTOR LINEAR CONTROLLER
A 4 A/C DUAL PRESSURE SW
A 3 A/C MAGNETIC CLUTCH AND LOCK SENSOR
E 3 , E 4
ENGINE ECU (M/T) OR ENGINE AND ECT ECU (A/T)
PRE
ACMG
LCKI
J 1 JUNCTION CONNECTOR
(LHD)
(RHD)

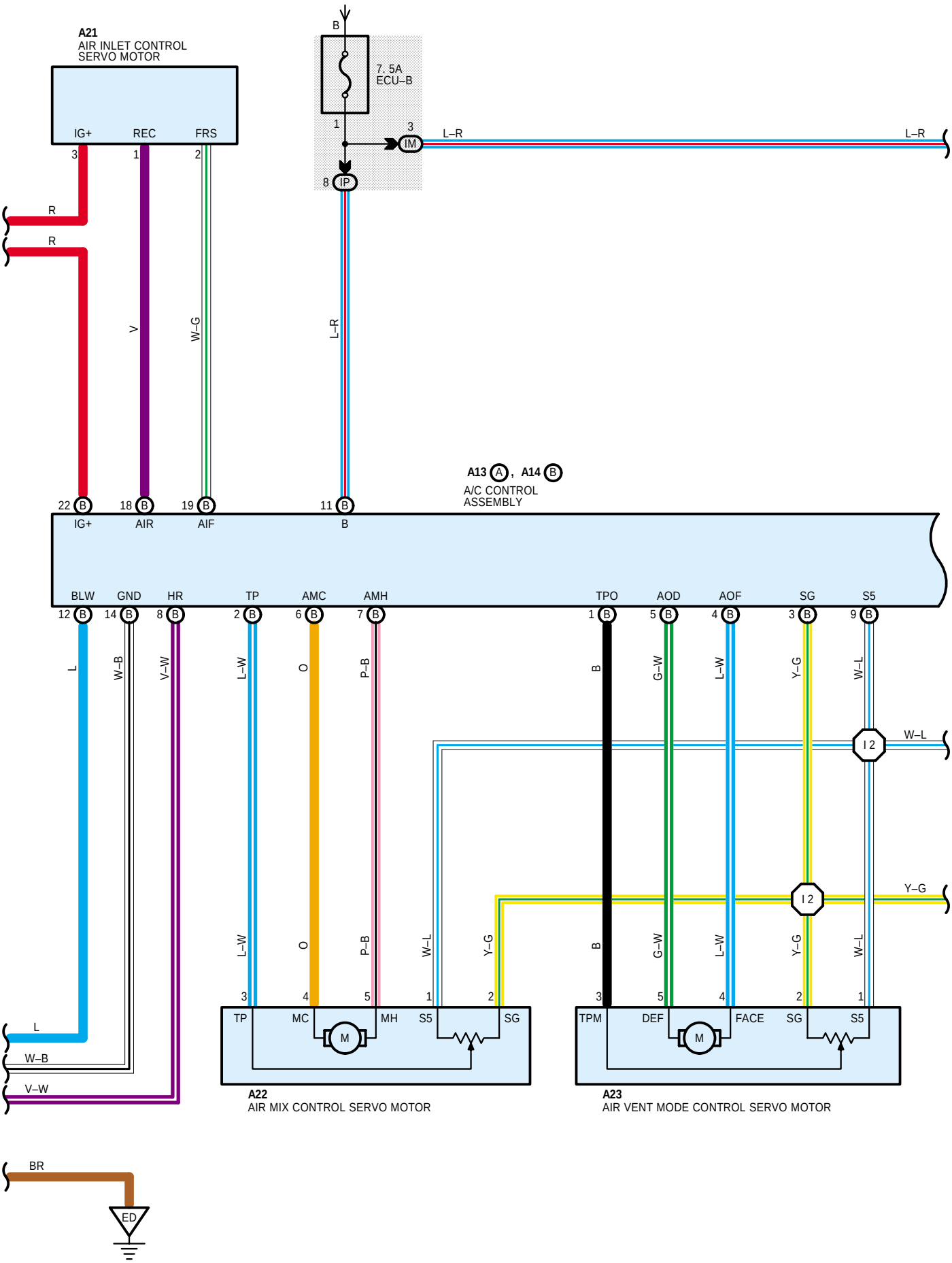
FROM POWER SOURCE SYSTEM (SEE PAGE 128)
A21
AIR INLET CONTROL SERVO MOTOR
IG+
REC
FRS
7. 5A
ECU–B
IM
IP
L–R
A13 A, A14 B
A/C CONTROL ASSEMBLY
IG+
AIR
AIF
B
BLW
GND
HR
TP
AMC
AMH
TPO
AOD
AOF
SG
S5
I 2
A22
AIR MIX CONTROL SERVO MOTOR
TP
MC
MH
S5
SG
A23
AIR VENT MODE CONTROL SERVO MOTOR
TPM
DEF
FACE
SG
S5
BR
ED
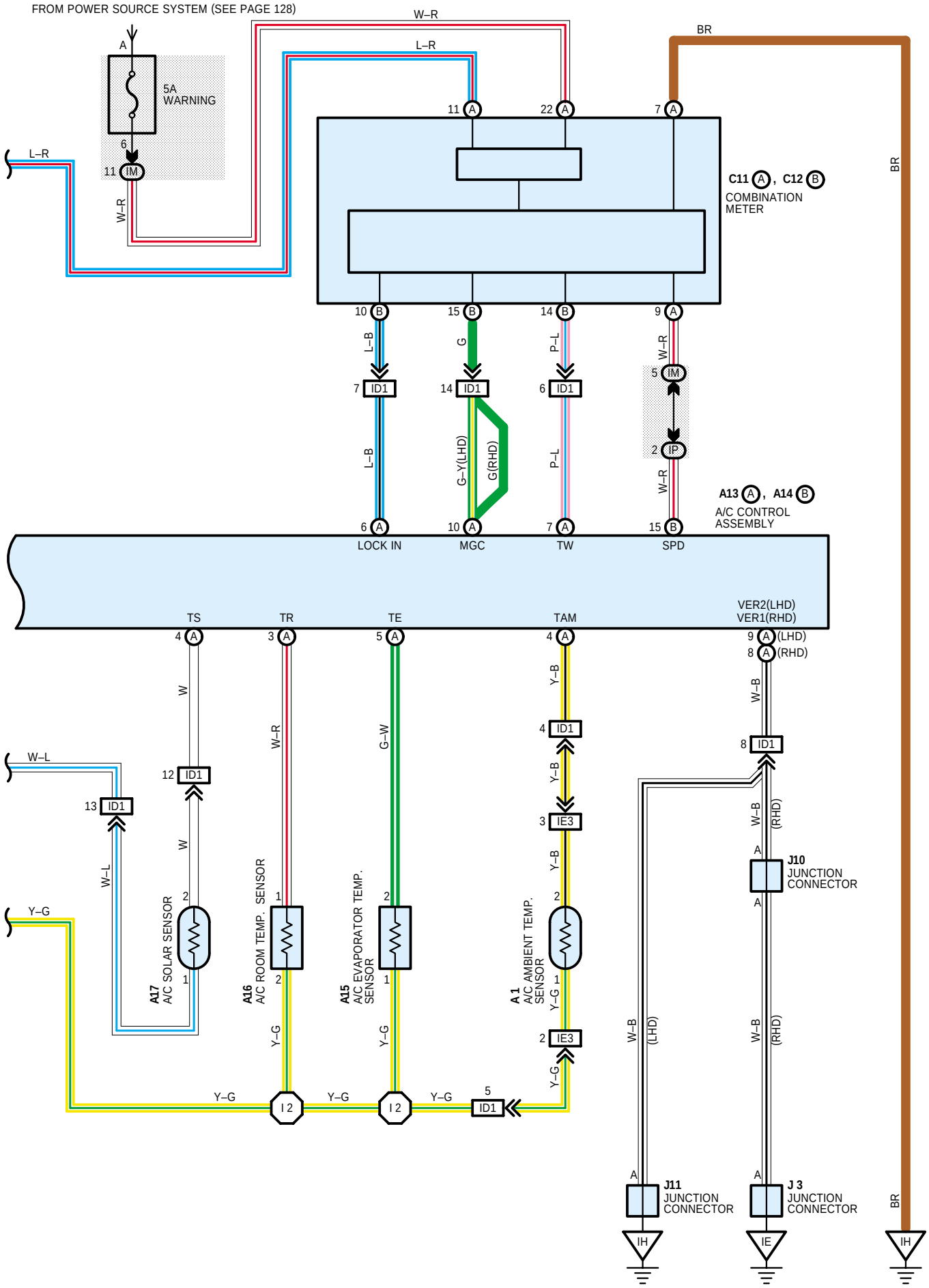
AUTOMATIC AIR CONDITIONER